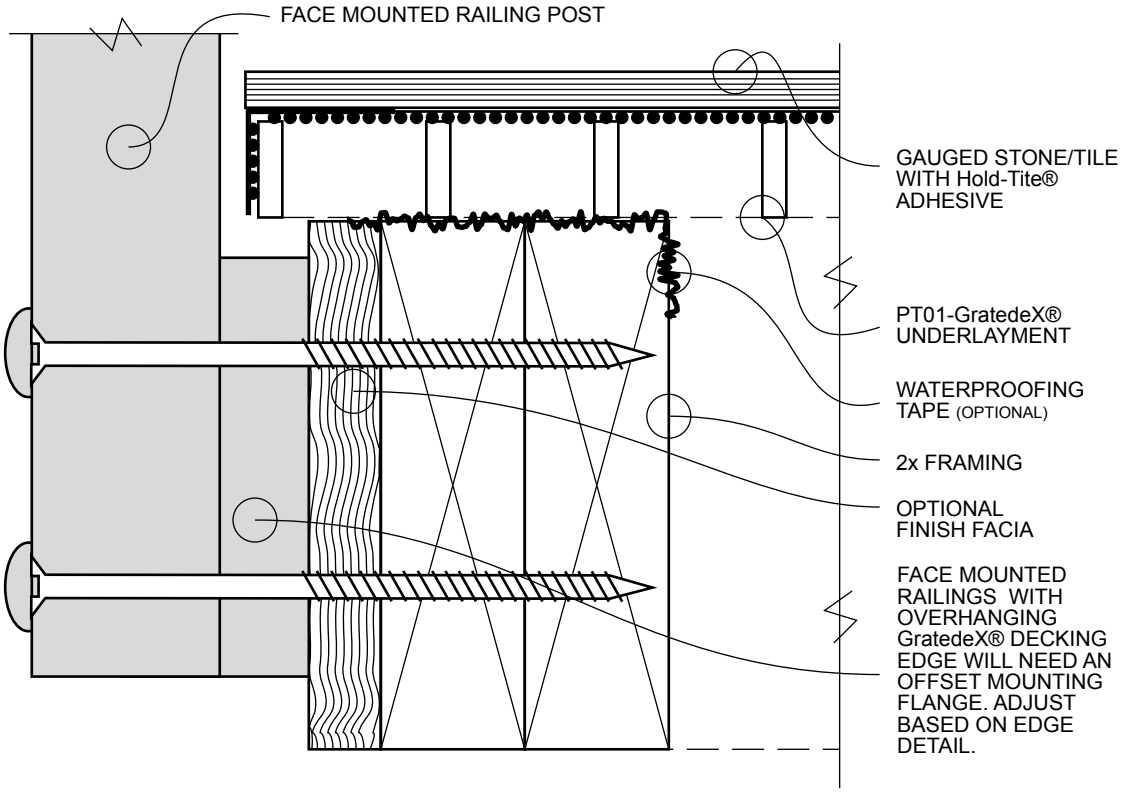

GX01, GX02, GX03: FACE MOUNT POST

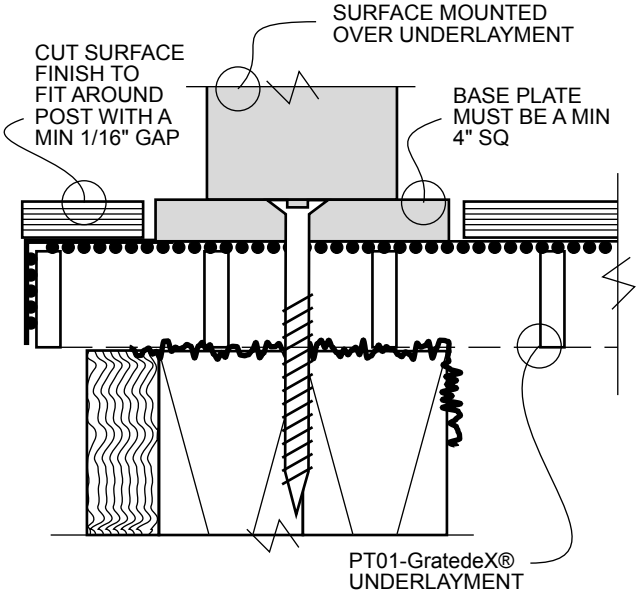

GX01, GX02, GX03: SURFACE MOUNT-ON UNDRLYMN T

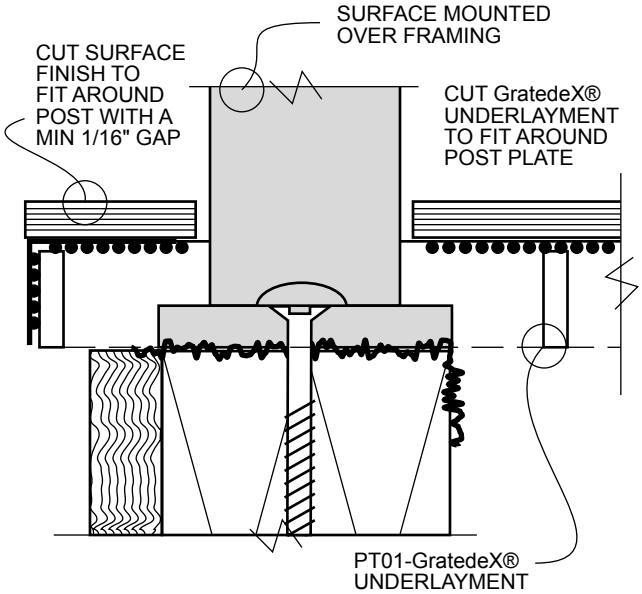

GX01, GX02, GX03: SURFACE MOUNT-TO FRAMING

DATE: 03/01/09

GX01, GX02, GX03: RAILING MOUNT DETAIL

GRATEDEX® Outdoor Floor System™

PATENT PENDING

WWW.OUTDOORFLOORSYSTEM.COM

Copyright ©2005